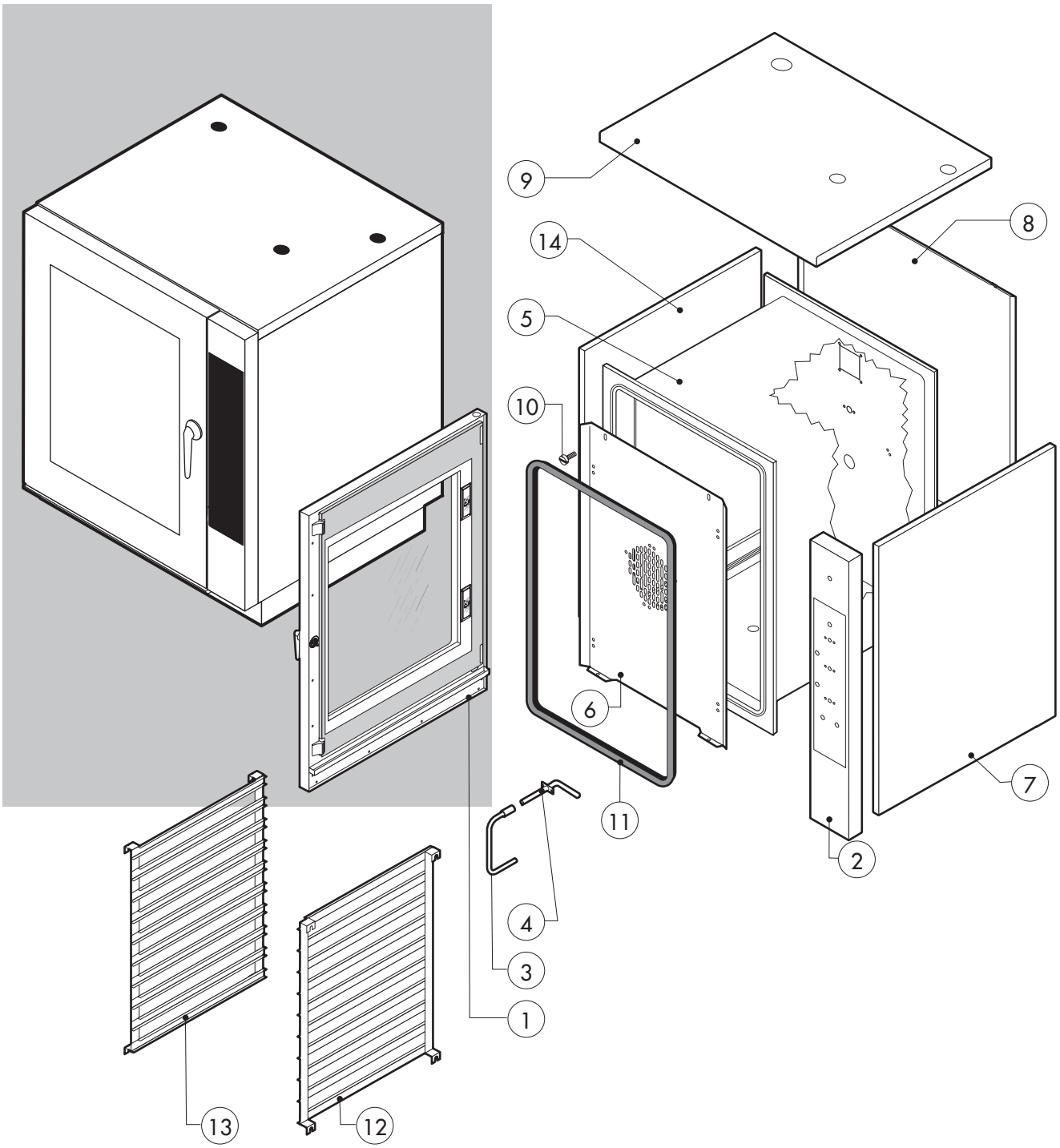

POS.	CODE	PIECES	DESCRIPTION
1	R18100481	1	DOOR ASSEMBLY
2	R18202870	1	CONTROL PANEL
3	R11201970	1	SPRITZER EXTENSION
4	R11202270	1	SPRITZER UNION
5	R18210301	1	COOKING CABINET ASSEMBLY
6	R18421240	1	FAN GUARD PANEL ASSEMBLY
7	R18420990	1	RIGHT SIDE PANEL
8	R18421020	1	REAR PANEL
9	R18420450	1	COVER PANEL
10	R58006400	4	FAN GUARD FASTENING SCREW
11	R70044830	1	FRONT GASKET
12	R18421390	1	REMOVABLE RACK DX
13	R18421400	1	REMOVABLE RACK SX
14	R18401050	1	LEFT SIDE PANEL

POS.	CODE	PIECES	DESCRIPTION

Serie New

EDIZIONE 0211

ECE 101 M

tav. A

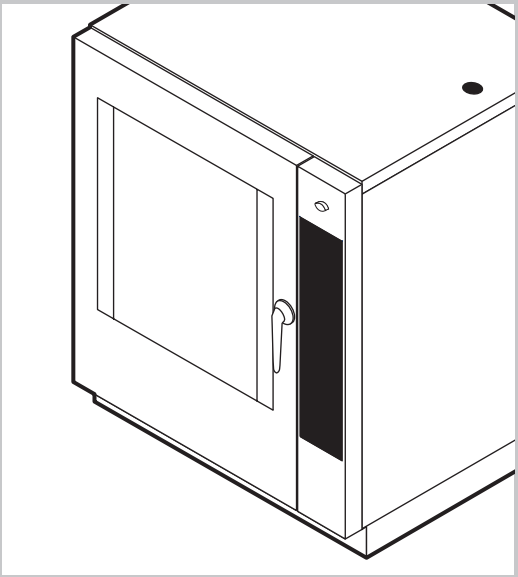

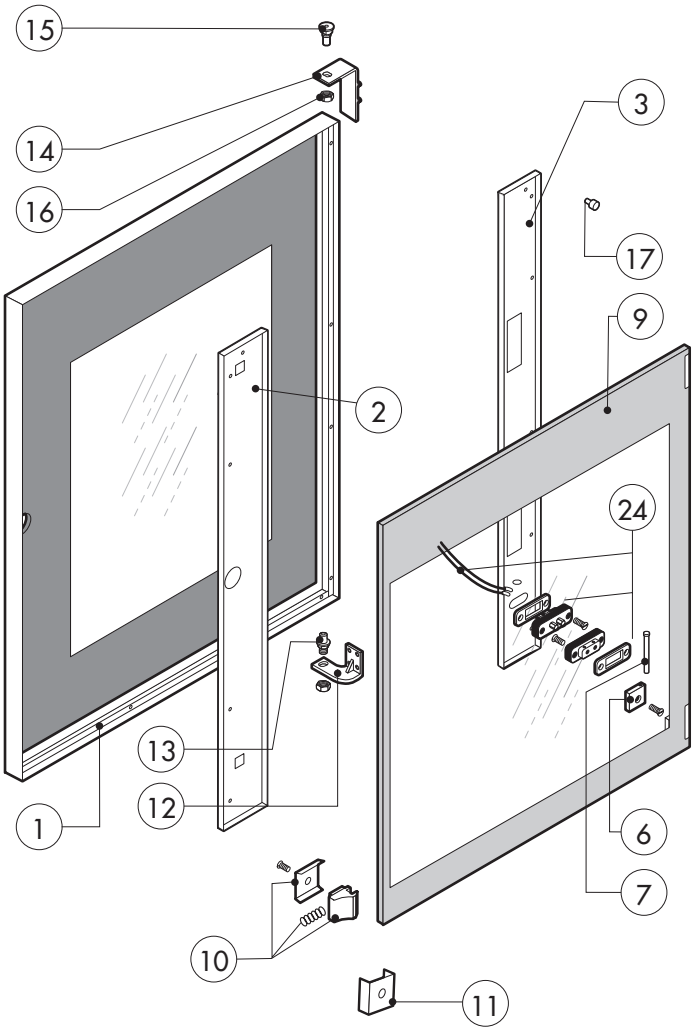

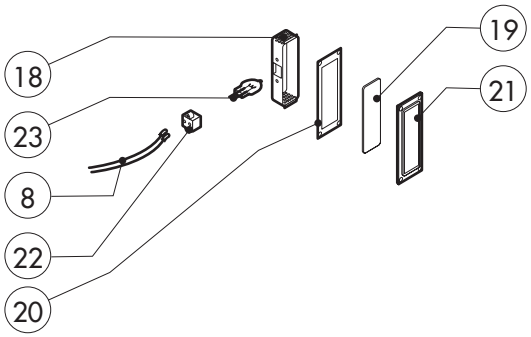

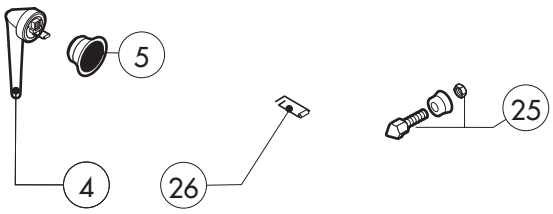

POS.	CODE	PIECES	DESCRIPTION
1	R18202790	1	DOOR
2	R18420781	1	RIGHT DOOR POST
3	R18420791	1	LEFT DOOR POST
4	R69010210	1	DOORHANDLE
5	R69010630	1	DOORHANDLE COVER
6	R58001760	2	INNER GLASS SOLID HINGE
7	R58001770	2	INNER GLASS HINGE PIN
8	R66110320	1	DOOR LAMPS CABLE SET
9	R71201530	1	OUTER DOOR GLASS
10	R58001780	2	INNER GLASS CATCH KIT
11	R11401350	2	OUTER DOOR GLASS FLANGE
12	R18404500	2	LOWER DOOR HINGE
13	R58002520	1	LOWER HINGE PIN
14	R11401410	1	UPPER DOOR HINGE
15	R58002150	1	UPPER HINGE PIN
16	R58004050	1	NUT FOR UPPER DOOR HINGE
17	R70050100	2	GLASS SILICON SPACERS
18	R11401440	6	LAMP COVER
19	R71500150	1	GLASS LAMP
20	R70044200	1	LAMP GASKET
21	R11401450	1	GLASS HOLDER LAMP FLANGE

POS.	CODE	PIECES	DESCRIPTION
22	R65270450	1	LIGHT SOCKET
23	R65270020	1	LIGHT 20W 12V G4
24	R65260750	1	LAMPS CONTACT BLOCK
25	R69010260	1	DOOR LATCH 1 STEP
26	R61620132	1	PRONG FLANGE

Serie New

EDIZIONE 0211

ECE 101 M tav. B

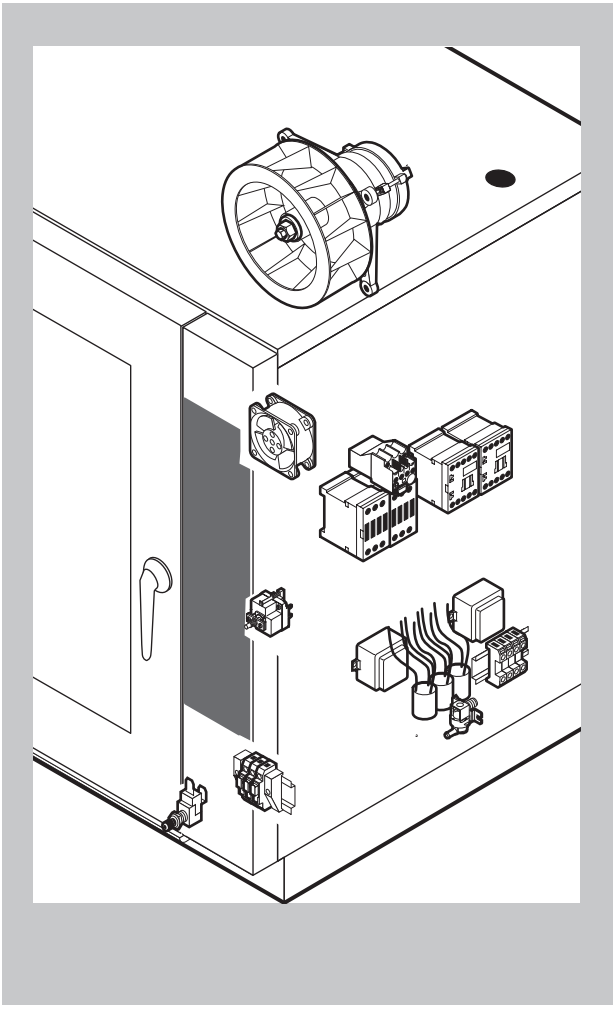

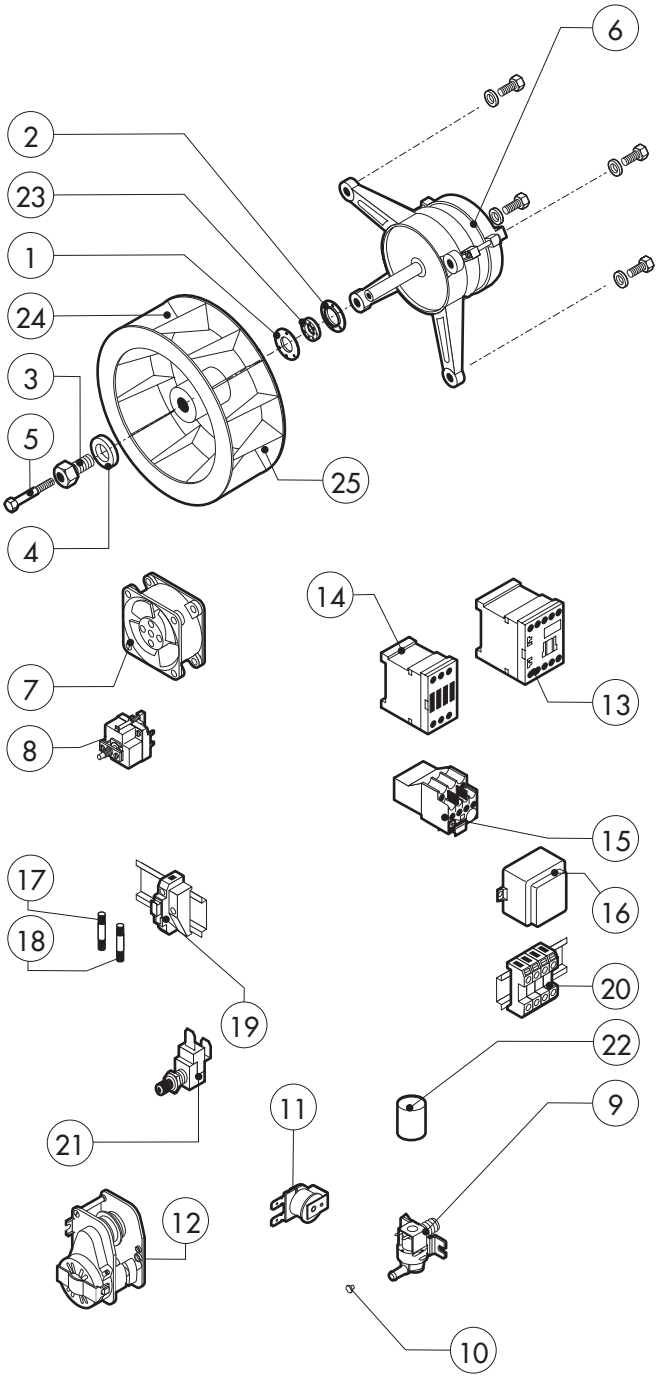

POS.	CODE	PIECES	DESCRIPTION
1	R58003840	1	MOTOR GASKET BRASS FLANGE
2	R58003850	1	MOTOR GASKET BRASS COUNTER FLANGE
3	R58004000	1	FAN SCREW M12x1.5 SX
4	R58004010	1	FAN WASHER Ø 30/12.5
5	R61020562	1	FAN SCREW TE A2 M6x55
6	*R65040530	1	MOTOR 055 KW 200/440V KIT
7	R65060050	1	COMPONENTS VENTILATION MOTOR Ø 120
8	R65070350	1	CHAMBER SAFETY THERMOSTAT
9	R65110200	1	SOLENOID VALVE 220V 50HZ
10	R65110520	1	22 LT/H WATER FLOW REDUCER
11	R65330010	1	BUZZER
12	R65090190	1	REVERSING SWITCH 8'
13	*R65140700	2	CONTACTOR DIL M9-01 4KW-20A
14	*R65140710	2	CONTACTOR DIL M17-01 7,5KW-35A
15	*R65160760	1	THERMIC PROTECTION ZB12-1,6
16	R65180420	1	TRANSFORMER 20VA
17	R65200200	1	FUSE 2A
18	R65200320	1	FUSE 0.200A (T)
19	R65210020	2	FUSE CARRIER

POS.	CODE	PIECES	DESCRIPTION
20	R65220290	1	TERMINAL BOARD
21	R65260540	1	DOOR SWITCH
22	*R65280200	3	INTERFERENCE SUPPRESSOR
23	R70020050	1	MOTOR GASKET
24	*R75400440	1	FAN Ø 350x114/12 50HZ P.D. KIT
25	R75400470	1	FAN Ø 350x114/12 60HZ P.D. KIT

*COMPONENT SUBMITTED TO CHANGEMENTS CAUSED BY TENSION DIFFERENT FROM THE STANDARD (AC 230V 50HZ)

EDIZIONE 0211

ECE 101 M

tav. C

Serie New

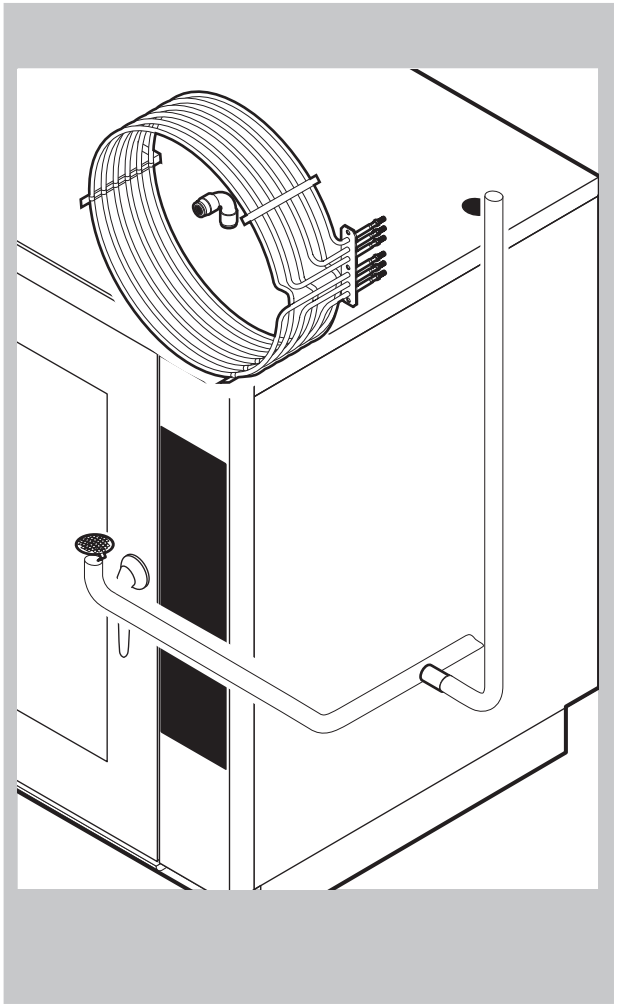

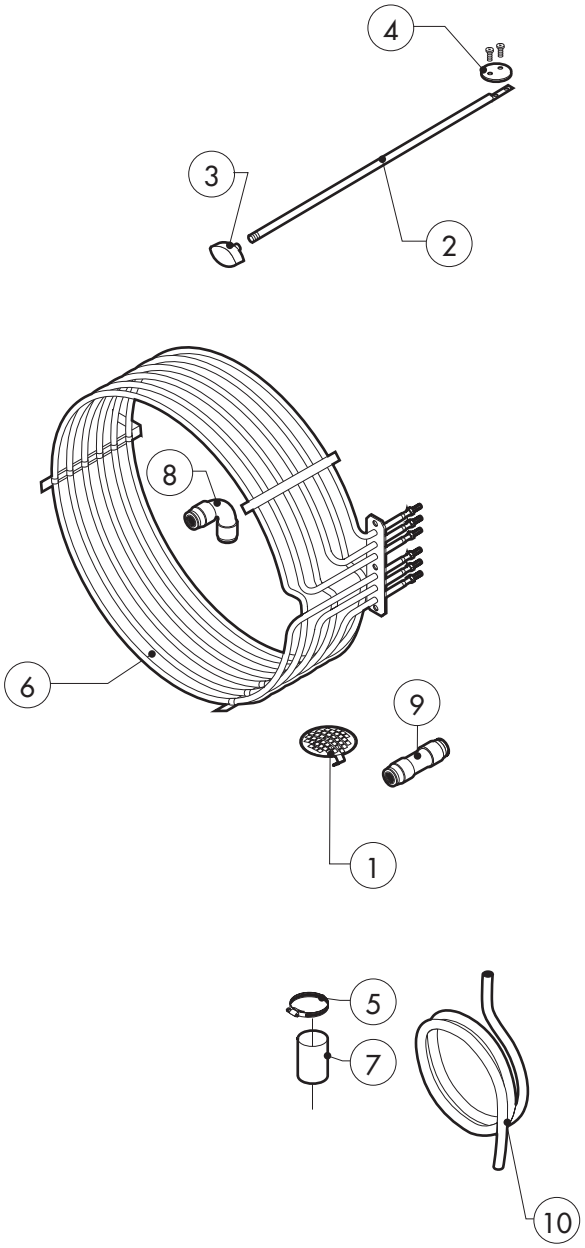

POS.	CODE	PIECES	DESCRIPTION
1	R10201710	1	DRAIN FILTER
2	R58006760	1	CHAMBER VENT ROD
3	R69010410	1	STEAM OUTLET KNOB
4	R18400940	1	CHAMBER VENT PLATE
5	R61630021	2	METAL CLAMPS 30-45/9
6	*R65011310	1	CHAMBER HEATING ELEMENT 15000W
7	R70060010	1	SILICON COUPLING Ø 30
8	R62090478	1	ELBOW MIDDLING PIPE FITTING D.10
9	R62090458	4	STRAIGHT MIDDLING PIPE FITTING D.10
10	R70070070	1	PE D.10 MM X7 WATER FLEXIBLE PIPE (1 MT LONG)

POS.	CODE	PIECES	DESCRIPTION

*COMPONENT SUBMITTED TO CHANGEMENTS CAUSED BY TENSION DIFFERENT FROM THE STANDARD (3N AC 400V 50HZ)

EDIZIONE 0211

ECE 101 M

tav. D

Serie New

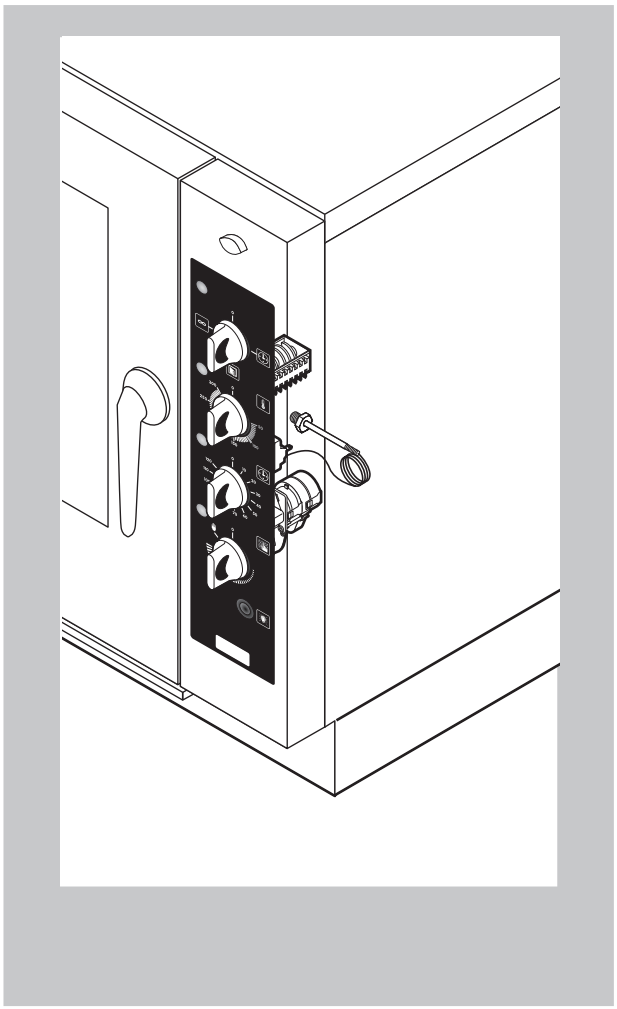

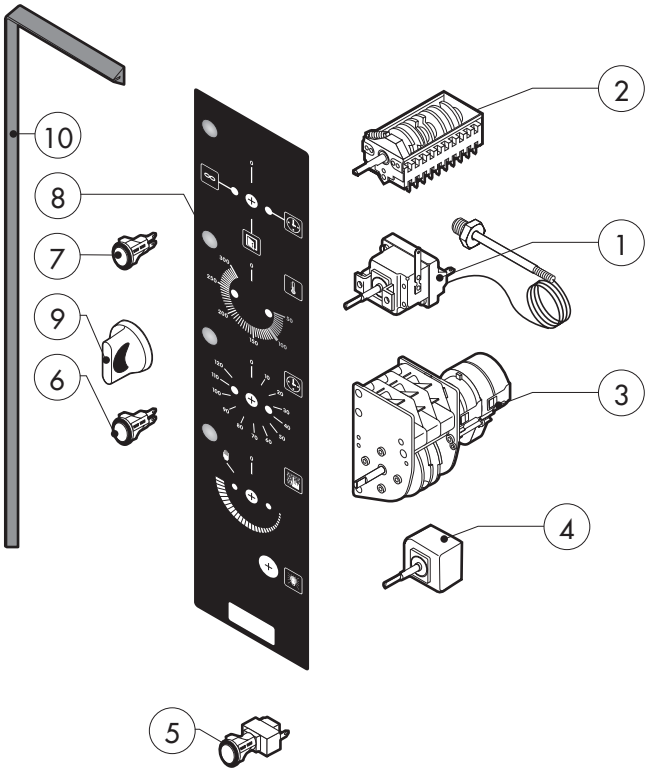

POS.	CODE	PIECES	DESCRIPTION
1	R65070360	1	CABINET THERMOSTAT 0°/300°C
2	R65080010	1	MAIN SELECTOR SWITCH
3	R65090020	1	TIMER
4	R65080250	1	ENERGY REGULATOR
5	R65260420	1	HUMIDIFIER PUSH BUTTON
6	R65270150	3	ORANGE INDICATING LIGHT
7	R65270160	1	GREEN INDICATING LIGHT
8	-	1	PLATE
9	R69030130	2	KNOB
10	R70044260	1	CONTROL PANEL GASKET

POS.	CODE	PIECES	DESCRIPTION

Serie New

EDIZIONE 0211

ECE 101 M

tav. E