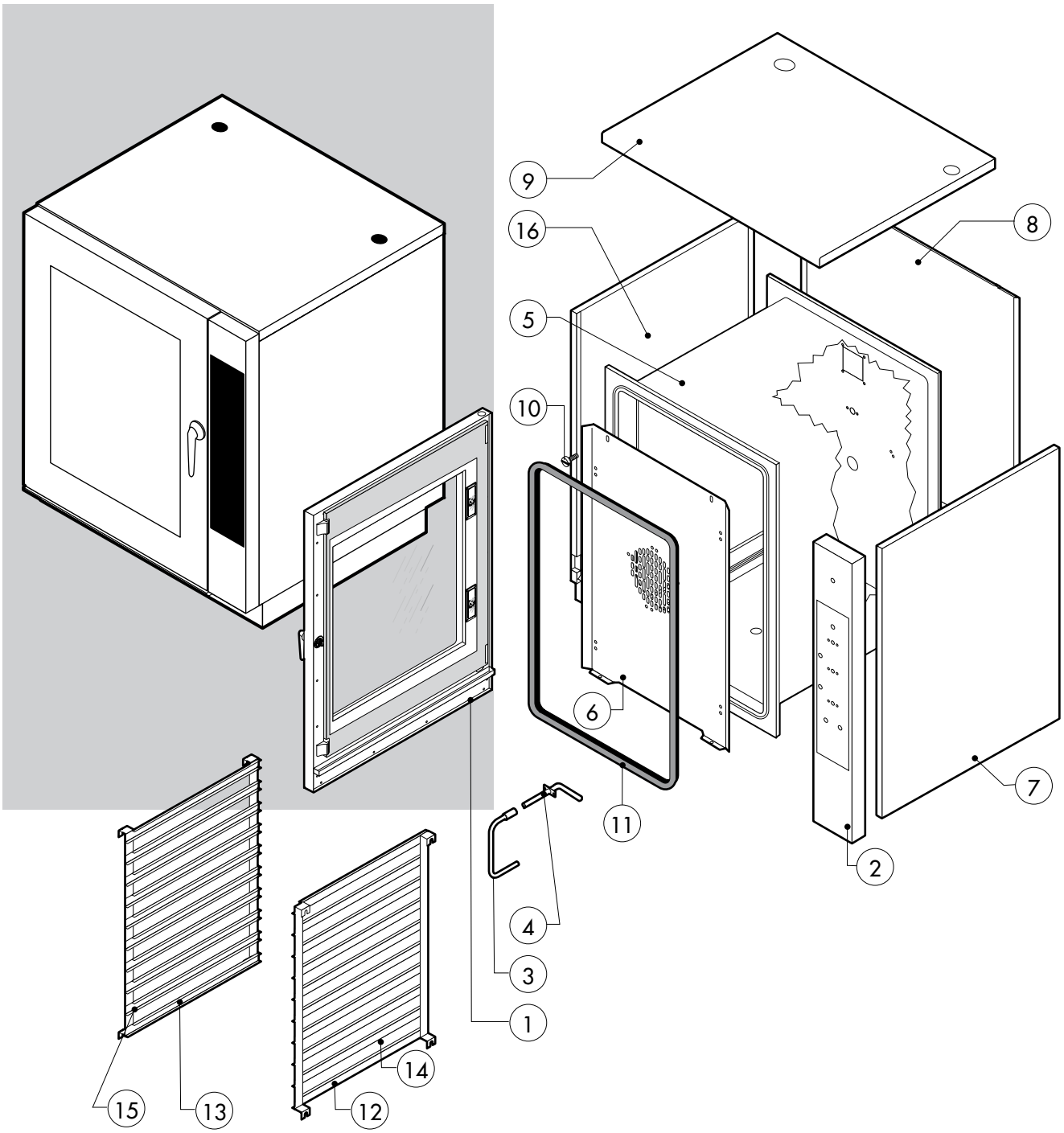

POS.	CODE	PIECES	DESCRIPTION
1	R18100601	1	DOOR ASSEMBLY
2	R18202870	1	CONTROL PANEL
3	R11201970	1	SPRITZER EXTENSION
4	R18200060	1	SPRITZER UNION
5	R18210631	1	COOKING CABINET ASSEMBLY
6	R18421270	1	FAN GUARD PANEL ASSEMBLY
7	R18421090	1	RIGHT SIDE PANEL
8	R18421110	1	REAR PANEL
9	R18420470	1	COVER PANEL
10	R58006400	4	FAN GUARD FASTENING SCREW
11	R70044860	1	FRONT GASKET
12	R18200180	1	RIGHT REMOVABLE RACK 8 LIV.
13	R18200190	1	LEFT REMOVABLE RACK 8 LIV.
14	R18200220	1	RIGHT REMOVABLE RACK 10 LIV.
15	R18200230	1	LEFT REMOVABLE RACK 10 LIV.
16	R18401030	1	LEFT SIDE PANEL

POS.	CODE	PIECES	DESCRIPTION

Serie New

EDIZIONE 0211

EBE 084-104 M tav. A

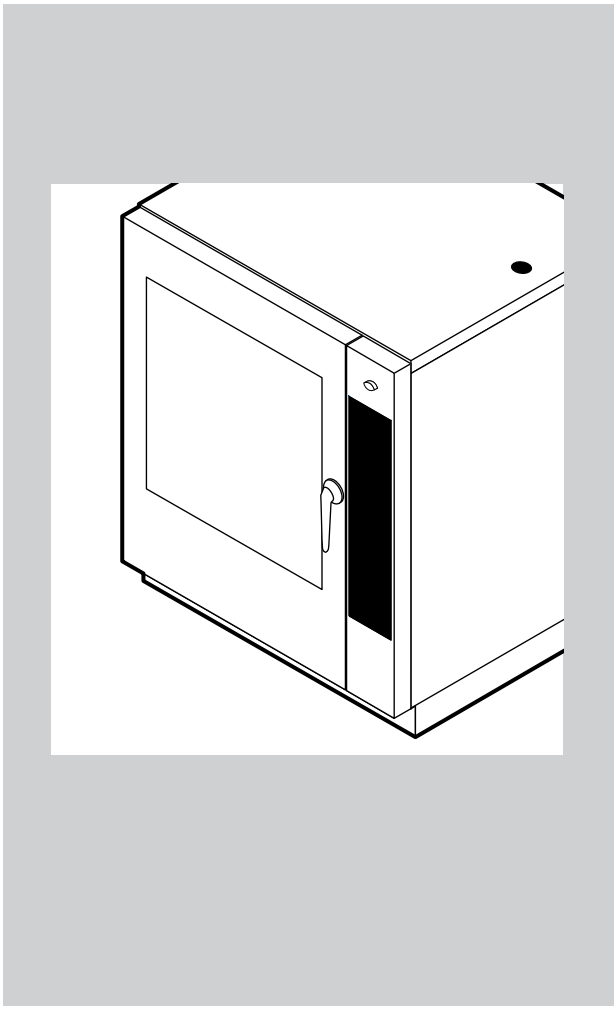

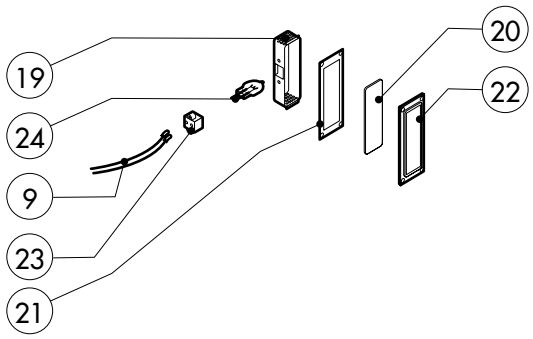

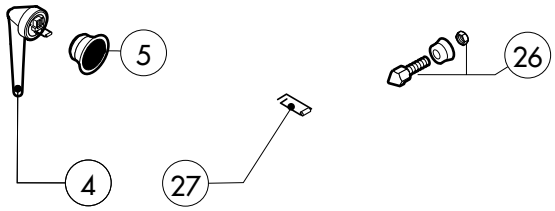

POS.	CODE	PIECES	DESCRIPTION
1	R18202820	1	DOOR
2	R18420781	1	RIGHT DOOR POST
3	R18420791	1	LEFT DOOR POST
4	R69010220	1	DOORHANDLE
5	R69010630	1	DOORHANDLE COVER
6	R18420831	1	DOOR BASIN
7	R58001760	2	INNER GLASS SOLID HINGE
8	R58001770	2	INNER GLASS HINGE PIN
9	R66110320	1	DOOR LAMPS CABLE SET
10	R71201580	1	OUTER DOOR GLASS
11	R58001780	2	INNER GLASS CATCH KIT
12	R11401350	2	OUTER DOOR GLASS FLANGE
13	R18404500	1	LOWER DOOR HINGE
14	R58002520	1	LOWER HINGE PIN
15	R11401410	1	UPPER DOOR HINGE
16	R58002150	1	UPPER HINGE PIN
17	R58004050	2	NUT FOR UPPER DOOR HINGE
18	R70050100	6	GLASS SILICON SPACERS
19	R11401440	1	LAMP COVER

POS.	CODE	PIECES	DESCRIPTION
20	R71500150	1	GLASS LAMP
21	R70044200	1	LAMP GASKET
22	R11401450	1	GLASS HOLDER LAMP FLANGE
23	R65270450	1	LIGHT SOCKET
24	R65270020	1	LIGHT 20W 12V G4
25	R65260750	1	LAMPS CONTACT BLOCK
26	R69010260	1	DOOR LATCH 1 STEP
27	R61620132	1	DOOR LOCK SPRING

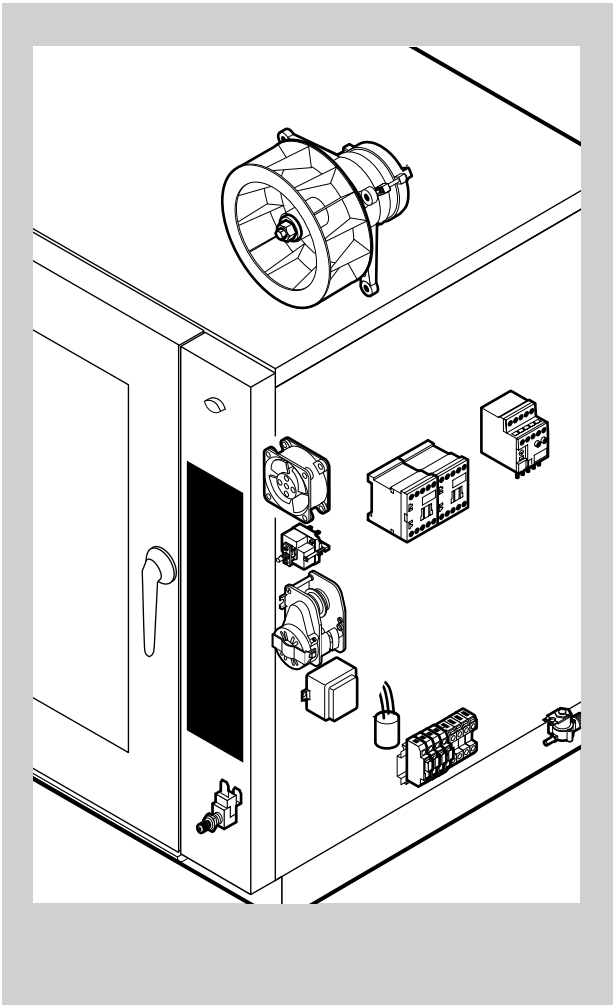

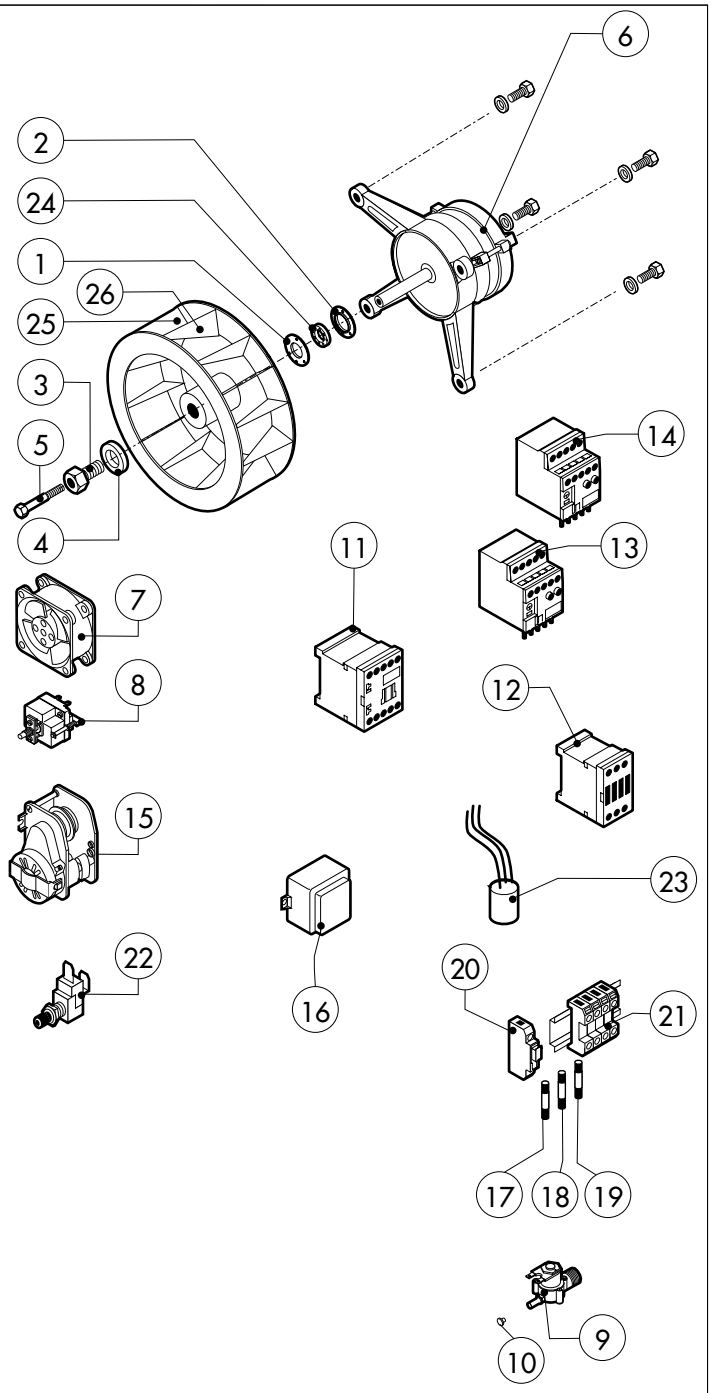

POS.	CODE	PIECES	DESCRIPTION
1	R58003840	1	MOTOR GASKET BRASS FLANGE
2	R58003850	1	MOTOR GASKET BRASS COUNTER FLANGE
3	R58004000	1	FAN SCREW M12x1.5 SX
4	R58004010	1	FAN WASHER Ø 30/12.5
5	R61020562	1	FAN SCREW TE A2 M6x55
6	*R65040520	1	MOTOR KW 055/015 F3 4-6P 3039200-440V I
7	R65060050	1	COMPONENTS VENTILATION MOTOR Ø 120
8	R65070350	1	CHAMBER SAFETY THERMOSTAT
9	R65110200	1	SOLENOID VALVE 220V 50HZ
10	R65110510	1	15 LT/H WATER FLOW REDUCER
11	*R65140700	4	CONTACTOR DIL M9-01 4KW-20A
12	*R65140710	3	CONTACTOR DIL M17-01 7,5KW-35A
13	*R65160750	1	THERMIC PROTECTION ZB12-1
14	*R65160760	1	THERMIC PROTECTION ZB12-1,6
15	R65090190	1	REVERSING SWITCH 8'
16	R65180420	1	TRANSFORMER 20VA
17	R65200200	1	FUSE 2A
18	R65200120	1	FUSE 0.1A (T)
19	R65200086	1	FUSE 0.125A (T)
20	R65210020	2	FUSE CARRIER
21	R65220290	1	TERMINAL BOARD

POS.	CODE	PIECES	DESCRIPTION
22	R65260540	1	DOOR SWITCH
23	*R65280200	3	INTERFERENCE SUPPRESSOR
24	R70020050	1	MOTOR GASKET
25	*R75400440	1	FAN Ø 350x114/12 50HZ P.D. KIT
26	R75400470	1	FAN Ø 350x114/12 60HZ P.D. KIT

*COMPONENT SUBMITTED TO CHANGEMENTS CAUSED BY TENSION DIFFERENT FROM THE STANDARD (3N AC 400V 50HZ)

EDIZIONE 0211

EBE 084-104 M tav. C

Serie New

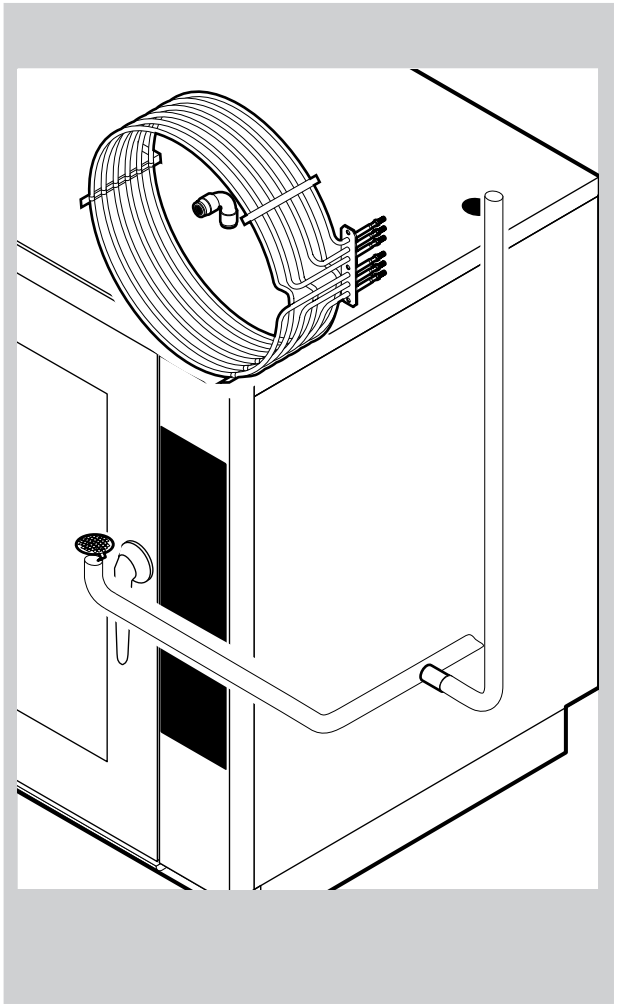

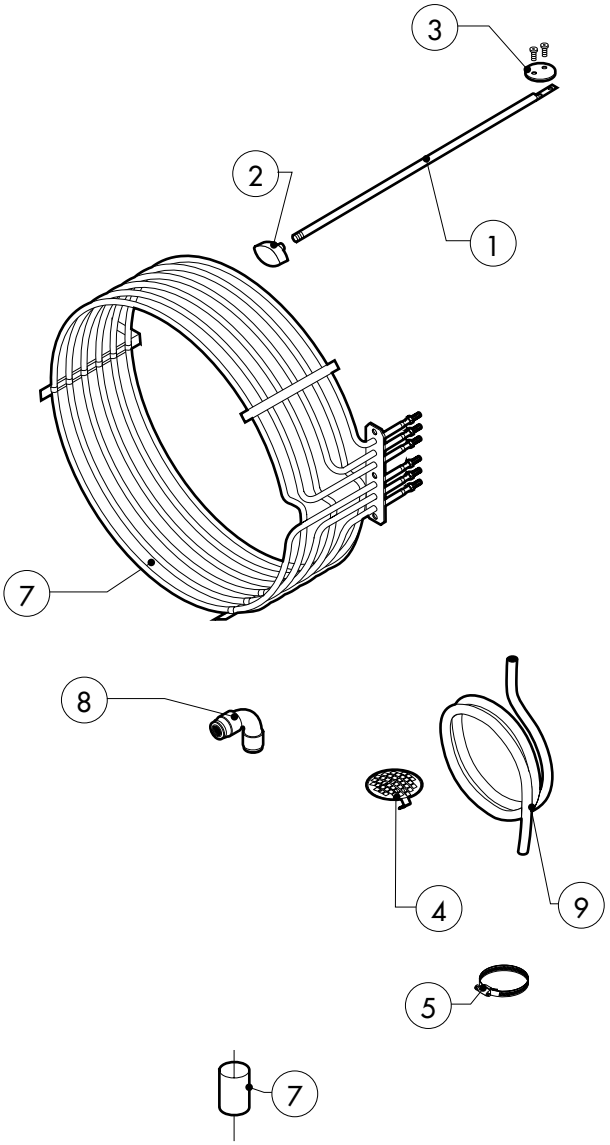

POS.	CODE	PIECES	DESCRIPTION
1	R58007100	1	CHAMBER VENT ROD
2	R69010410	1	STEAM OUTLET KNOB
3	R18400940	2	CHAMBER VENT PLATE
4	R10201700	1	DRAIN FILTER
5	R61630021	2	METAL CLAMPS 30-45/9
6	*R65011310	1	CHAMBER HEATING ELEMENT 15000W
7	R70060010	1	SILICON COUPLING Ø 30
8	R62090478	4	ELBOW MIDDLING PIPE FITTING D.10
9	R70070050	1	PE D.10 MM X7 WATER FLEXIBLE PIPE (3 MT LONG)

POS.	CODE	PIECES	DESCRIPTION

*COMPONENT SUBMITTED TO CHANGEMENTS CAUSED BY TENSION DIFFERENT FROM THE STANDARD (3N AC 400V 50HZ)

EDIZIONE 0211

EBE 084-104 M tav. D

Serie New

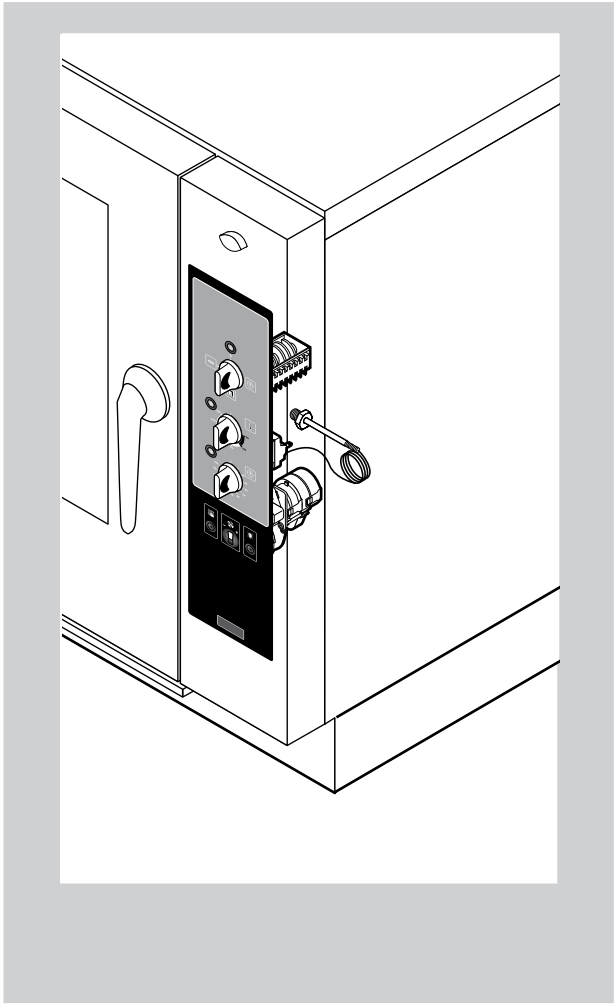

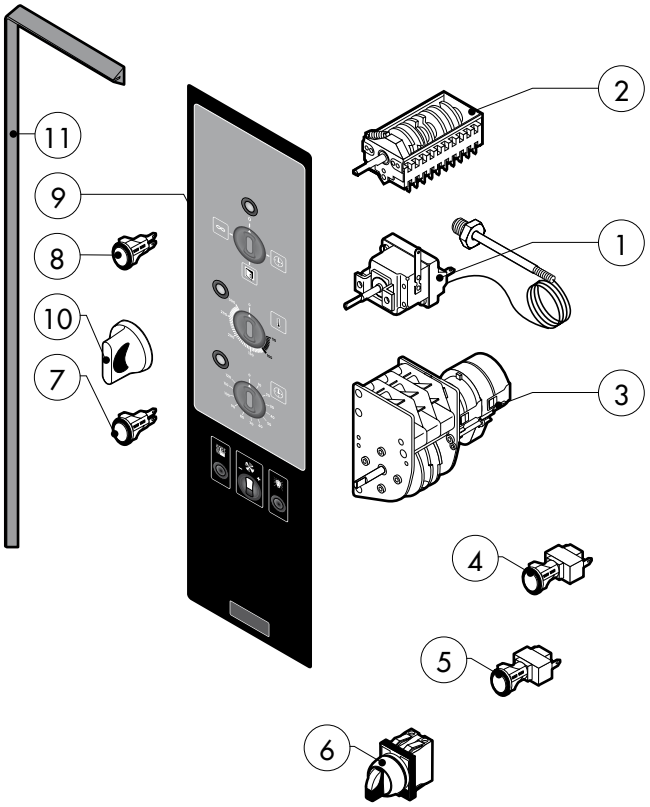

POS.	CODE	PIECES	DESCRIPTION
1	R65070360	1	CABINET THERMOSTAT 0°/300°C
2	R65080010	1	MAIN SELECTOR SWITCH
3	R65090020	1	TIMER
4	R65260600	1	SWITCH
5	R65260420	1	HUMIDIFIER PUSH BUTTON
6	R65080150	1	2 POSITIONS SELECTOR SWITCH
7	R65270150	2	ORANGE INDICATING LIGHT
8	R65270160	1	GREEN INDICATING LIGHT
9	-	1	PLATE
10	R69030170	3	KNOB
11	R70044260	1	CONTROL PANEL GASKET

POS.	CODE	PIECES	DESCRIPTION

Serie New

EDIZIONE 0211

EBE 084-104 M tav. E