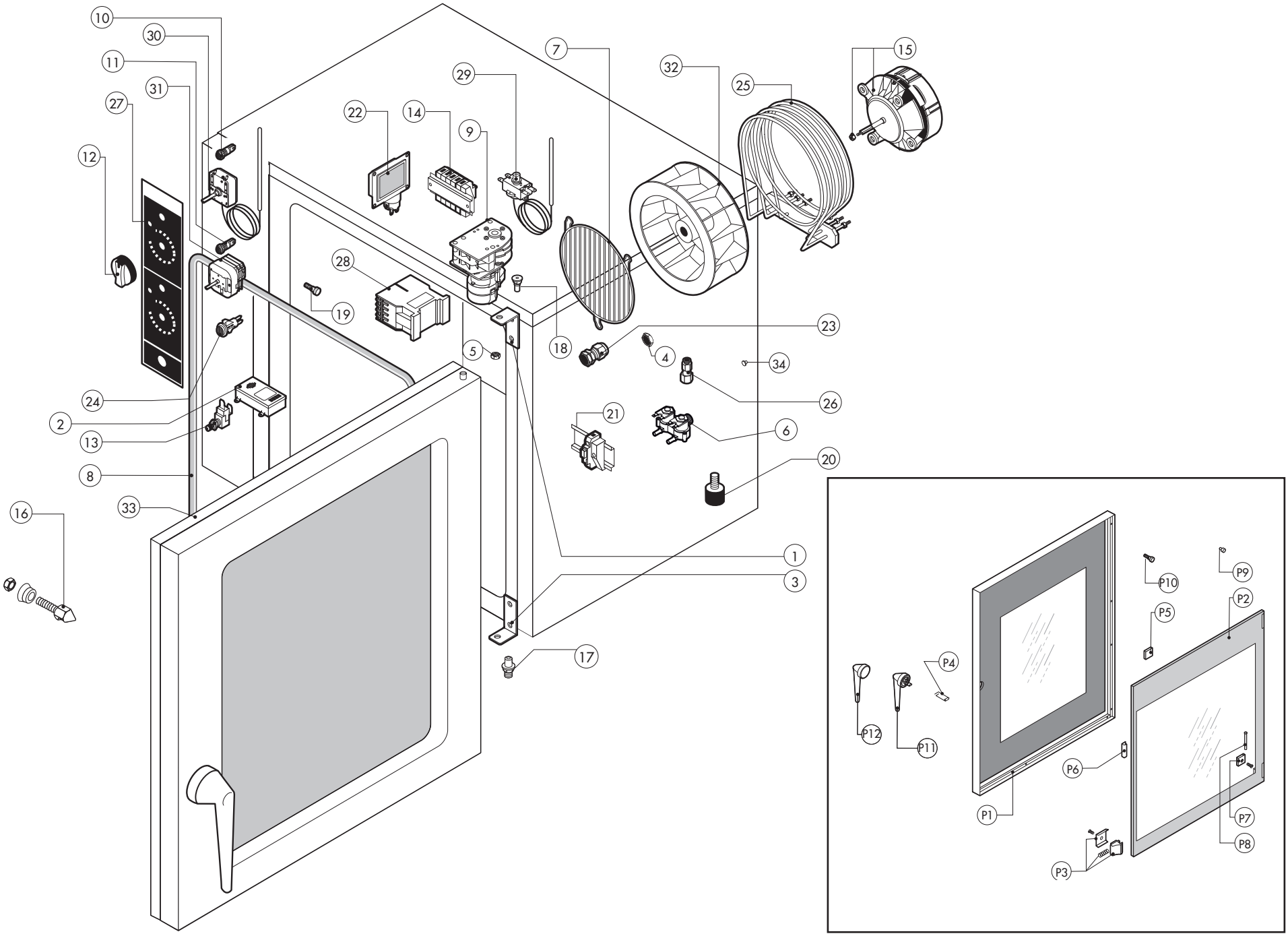

TAV. A

REB 084-104 M

ATTENZIONE: PER ORDINARE I RICAMBI, SPECIFICARE SEMPRE IL MODELLO DI FORNO ED IL NUMERO DI MATRICOLA
ATTENTION: WHEN ORDERING SPARE PARTS, PLEASE ALWAYS SPECIFY THE OVEN MODEL AND THE SERIAL NUMBER
ATTENTION: POUR COMMANDER DES PIECES, MERCI DE SPECIFIER TOUJOURS LE MODELE DU FOUR ET LE NUMERO DE SERIE
ACHTUNG: UM ERSATZTEILE ZU BESTELLEN, BITTE IMMER OFEN-MODELL UND SERIENNUMMER GEBEN.

ed. 0412

POS.	COD.	Pz.	DESCRIZIONE	DESCRIPTION	DESCRIPTION	BESCHREIBUNG	DESCRIPCIÓN
1	R17201110	1	ASS.CERNIERA SUP.PORTA REC-REV-REP 2011	UPPER HINGE	CHARNIERE SUPERIEUR	OBERES SCHARNIER	BISAGRA SUPERIOR
2	R65330050	1	BUZZER TEMPOR.3" 230V C/SCAT.	BUZZER 3"	SONNERIE 3"	SUMMER MIT ZEITGLEID	ZUMBADOR TEMPORIZADO 3"
3	R17403910	1	CERNIERA INF. PORTA REGOL.REC-REV-REP	LOWER HINGE	CHARNIERE INFERIEUR	UNTERES SCHARNIER	BISAGRA INFERIOR
4	R65240210	1	CONTRODADO 116/21 N.	CABLE GLAND LOCK NUT	CONTRE-ECROU POUR RONDELLE FIXATION	MUTTER	CONTRODADO PASACABLE
5	R58004050	2	DADO PER PERNO CERNIERA REG. M/106-220	NUT FOR UPPER DOOR HINGE	ECROU CHEVILLE CHARNIERE SUPERIEURE	MUTTER F. OBERES SCHARNIERSTIFT	TUERCA PARA PERNO BISAGRA SUPERIOR
6	R65110210	1	E.V. 2 VIE 220V 50HZ X J.G.CON ATTACC	SOLENOID VALVE 220V 50HZ	ELECTROVANNE 220V 50HZ	MAGNETVENTIL 220V 50HZ	ELECTROVALVULA 220V 50HZ
7	R75300150	2	GRIGLIA VENTILATORE D.170	FAN GUARD GRID D.170	GRILLE VENTILATEUR D.170	VENTILATORSCHUTZGITTER D.170	REJILLA VENTILADOR D.170
8	R70044760	1	GUARNIZIONE FACCIATA REP084/104	FRONT GASKET	JOINT FACADE	DICHTUNG DER FRONTSEITE	JUNTA FRONTAL
9	R65090170	1	INVERSORE CICLICO 8' 3 CAMME	REVERSING SWITCH	INVERSEUR	POLWENDER	INVERSOR CICLICO
10	R65270300	1	LUCE SPIA GIALLA ALPHATECH SL 656 TZB	ORANGE INDICATING LIGHT	LAMPE TEMOIN ORANGE	ORANGENE KONTROLLAMPE	LAMPARA PILOTO NARANJA
11	R65270320	1	LUCE SPIA VERDE ALPHATECH SL 656 TZA	GREEN INDICATING LIGHT	LAMPE TEMOIN VERT	GRUENE KONTROLLAMPE	LAMPARA PILOTO VERDE
12	R69030170	2	MANOPOLA NEUTRA NERO/GRIGIA D.42	KNOB KIT	POIGNEE COMMANDE	DREHKNOPF	PULSADOR MANETA
13	R65260540	1	MICRO PORTA	DOOR SWITCH	MICRO PORTE	TUERSCHALTER	MICRO PUERTA
14	R65220091	1	MORSETTIERA LX2E (TIPO 2) NEW	TERMINAL BOARD	BORNIER	KLEMMLEISTE	REGLETERA
15	R65041010	2	MOTORE 1F.200W 2VEL(C/COND.)C06110	MOTEUR	MOTOR	MOTOR	MOTOR
16	R69010260	1	NASELLO 1 STEP 6303-020022.	DOOR LATCH 1 STEP	GACHE DE PORTE POUR OUVERTURE SIMPLE	SCHLIESSNASE 1 STUFE	NARIZ 1 CIERRE
17	R58002520	1	PERNO INF.CERNIERA REG. V/061-102	LOWER HINGE PIN	CHEVILLE CHARNIERE INFERIEURE	UNTERES SIE SCHARNIERSTIFT	PERNO INFERIOR BISAGRA
18	R58002150	1	PERNO SUP.CERNIERA REG. M/106-220	UPPER HINGE PIN	CHEVILLE CHARNIERE SUPERIEURE	OBERES SCHARNIERSTIFT	PERNO SUPERIOR BISAGRA
19	R58001850	16	PERNO SUPP. PARATIE M5 MIXTER	RACK HOLDER	BOLZEN AUFLAGESCHIENEN	SUPPORT GLISSIERE	PERNO SOPORTE MAMPARO
20	R69070220	4	PIEDINO INOX+NYLON D.40 H TOT.60 FIL.M10	FOOT	VERIN	ZYLINDRISCHER FUSS	PIE ACERO
21	R65210020	1	PORTAFUSIBILE BARRA DIN 5x20	FUSE CARRIER	PORTE-FUSIBLE	SICHERUNGSHALTER	PORTAFUSIBLE
22	R65270510	2	PORTALAMPADA STAGNO ALPHATECH 77.705.U10	WATERPROOF LIGHT SOCKET	DOUILLE ETANCHEE	DICHTE LAMPEHALTERUNG	PORTALAMPARA ESTANCO
23	R65240200	1	PRESSACAVO V-TEC 21 NERO	FAIRLEAD	PRESSE CABLE	ZUGENTLASTUNG	PRENSACABLES
24	R65260520	1	PULSANTE COMANDO UMIDIFICATORETIPO SPL60	HUMIDIFIER PUSH BUTTON	TOUCHE HUMIDIFICATEUR	BESCHWADUNGSDRUCKTASTE	PULSADOR UMIDIFICADOR
25	R65011730	2	RESIST.7000W230V CAM. ALPHA INCOLOY800	HEATING ELEMENT	RESISTANCE	HEIZKOERPER	RESISTENCIA
26	R62090788	2	RIDUZIONE INTER.DRITTA ø10-ø6 PM201006E	REDUCTION	REDUCTION	VERRINGERUNG	REDUCCION
27		1	TASTIERA	PLATE	PLAQUE	BEDIENUNGSFOLIE	TARJETA
28	R65140380	2	TELERUTTORE 3RT1016-1AP02 .	CONTACTOR	CONTACTEUR	SCHUETZ	CONTACTOR
29	R65070460	1	TERMOST.SICUR.BIP.360°C NEGAT.	THERMOSTAT	THERMOSTAT	THERMOSTAT	TERMOSTATO
30	R65070400	1	TERMOSTATO 50/300øC KT 170 CLA	THERMOSTAT 50/300°C	THERMOSTAT 50/300°C	THERMOSTAT 50/300°C	TERMOSTATO 50/300°C
31	R65090090	1	TIMER ELETTROM.120' C/POS.MAN.MS65 6935A	TIMER	MINUTERIE	ZEITSCHALTUHR	TEMPORIZADOR
32	R75400410	2	VENTOLA D.180X77/12 50HZ P.D.	FAN	TURBINE	LUEFTERRAD	PALA VENTILADOR
33	R17104440	1	PORTA COMPLETA REB084/104 AT	DOOR ASSEMBLY	PORTE COMPLETE	TUER KOMPLETT	PUERTA COMPLETA
34	R65110500	2	REGOL. PORT. MARR. ATCH. 10Lt/h	10 LT/H WATER FLOW REDUCER	REGULATUER DE DEBIT 10 LT.	DURCHFLUSSMONDERER 10L/STD.	REGULADOR DE CAUDAL 10 LT.

ATTENZIONE: PER ORDINARE I RICAMBI, SPECIFICARE SEMPRE IL MODELLO DI FORNO ED IL NUMERO DI MATRICOLA
ATTENTION: WHEN ORDERING SPARE PARTS, PLEASE ALWAYS SPECIFY THE OVEN MODEL AND THE SERIAL NUMBER
ATTENTION: POUR COMMANDER DES PIECES, MERCI DE SPECIFIER TOUJOURS LE MODELE DU FOUR ET LE NUMERO DE SERIE
ACHTUNG: UM ERSATZTEILE ZU BESTELLEN, BITTE IMMER OFEN-MODELL UND SERIENNUMMER GEBEN.

POS.	COD.	Pz.	DESCRIZIONE	DESCRIPTION	DESCRIPTION	BESCHREIBUNG	DESCRIPCIÓN
P1	R17200900	1	PORTA ESTERNA REP 084	EXTERNAL DOOR	PORTE D'EXTERNAL	AUSSENTÜR	PUERTA EXTERNA
P2	R71201950	1	VETRO POST. PORTA REP_084 700X855X6	DOOR GLASS	VITRE PORTE	HARTGLASS	VIDRIO
P3	R58001780	2	FERMO VETRO PORTA P2000	INNER GLASS CATCH KIT	ENSEMBLE ARRET VERRE INTERIEUR	VERSCHLUSSATZ F. INNENSCHEIBE	KIT FIJACION VIDRIO INTERNO
P4	R61620122	2	MOLLA D.6X18 ACC.INOX	SPRING	RESSORT	FRUHLING	MUELLE
P5	R18404520	2	SPESSORE PROTEZIONE VETRO	THICKNESS	EPAISSEUR	DICKE	ESPESOR
P6	R11423460	2	PROTEZIONE VETRO PORTA K E T 2011	GLASS PROTECTION	PROTECTION DE VERRE	GLASSCHUTZ	PROTECCION VIDRIO
P7	R58001760	2	CERNIERA FISSA VETRO SR2000	INNER GLASS SOLID HINGE	CHARNIERE VERRE INTERIEUR	SCHARNIER F. INNENSCHEIBE	BISAGRA FIJA VIDRIO INTERNO
P8	R58001770	2	PERNO CERNIERA VETRO SR2000	INNER GLASS HINGE PIN	PIVOT CHARNIERE VERRE INTERIEUR	SCHARNIERBOLZEN F. INNENSCHEIBE	PERNO BISAGRA VIDRIO INTERNO
P9	R70050100	6	TASSELLO BATTUTA VETRO SR.2000	DOOR CATCH KIT	ENSAMBLE FERMETURE PORTE	VERSCHLUSSATZ	MANIJA DE LA PUERTA
P10	R58001860	1	PERNO SUPP. PARATIE ALPHATECH	RACK HOLDER	SUPPORT GLISSIERE	BOLZEN AUFLAGESCHIENEN	PERNO SOPORTE MAMPARO
P11	R69010230	1	GRU.CHIU.BASC.C/AN.CROM.6303-GRIGIO-CORT	DOOR CATCH KIT	ENSAMBLE FERMETURE PORTE	VERSCHLUSSATZ	MANIJA DE LA PUERTA
P12	R18211890	1	ASS.COPERTURA MANIGLIA PORTA CEV	DOOR HANDLE	POIGNEE DE PORTE	GRIFFKORPUS	CUERPO MANETA